*HQHUDO 'HVFULSWLRQ

7KH *UHHQ&26 YROWDJH 026)(7 XWLOL]HV FKDUJH EDODQFH WHFKQR
ORZ RQ UHVLVWDQFH DQG ORZHU JDWH PLDUJH RQ,GXFWLRQ LQRVVUHSG
VXSHULRU VZLWFKLQJ SHUIRUPDQFH DQG UHVLVWDQFH FDSDELOLW\
7KH *UHHQ&26 QHULF VHULHV LV RSWLPL]HG IRU HW PLQLPL]H
VZLWFKLQJ ORVV ,W LV WDLORUHGRQV KLJK HRZHU KHQVLWVWSHC
VWDQGDUGV

)HDWXUHV

y /RZ 5)20
y ([WUHPHO\ ORZ VZLWFKLQJ ORVV
y ([FHOOHQW VWDELOLW\ DQG XQLIRUPLW\

$SSOLFDWLRQV

y 3& SRZHU
y /(' OLJKWLQJ
y 7HOHFRP SRZHU
y 6HUYHU SRZHU
y (9 &KDUJHU
y 6RODU 836

.H\ 3HUIRUPDQFH 3DUDPHWHUV

3DUDPHWHU	9DOXH		8QLW
9 PLQ # 7 PD[		9	
; SXOVH		$	
5 21 PD[# 9 9		P	
4J		Q&	

0DUNLQJ ,QIRUPDWLRQ

3URGXFW 1DPH	3DFNDJH		0DUNLQJ
26* 5))	72)	26* 5)	

$EVROXWH 0D[LPXP5DWLQJV RWKHUZLVH QRWHG

3DUDPHWHU	6\PERO	9DOXH	8Q
'UDLQ VRXUFH YROWDJH	'6	9	9
*DWH VRXUFH YROWDJH	*6	9	“
&RQWLQXRXV GUDLQ FXUUHQW	;		$
&RQWLQXRXV GUDLQ FXUUHQW			
3XOVHG GUDLQ FXUUHQW	' SXOVH		$
&RQWLQXRXV GLRGH IRUZDUG FXUUHQW,			
'LRGH SXOVHG FXUUHQW	6 ,SXOVH		$
3RZHU GLVVLSDWLRQ	'3		
6LQJOH SXOVHG DYDODQFKH HQHUJ\	$6		P-
026)(7 GY GW UXJJHGQHVV 9	GY GW		9 QV
5HYHUVH GLRGH«GY GW”;9	GY GW		9 QV
2SHUDWLQ DQG VWRUDJH WHPSHUDWXUH	WR		&7

7KHUPDO &KDUDFWHULVWLFV

3DUDPHWHU	6\PERO	9DOXH	8Q
7KHUPDO UHVLVWDQFH MXQFWLRQ FDVH			5
7KHUPDO UHVLVWDQFH MXQFWLRQ DPELHQW		:	5

(OHFWULFDO &KDUDFWHULVWLFV RWKHUZLVH VSHFLILHG

3DUDPHWHU	6\PERO	0LQ	7\S	0D[	8QLW	7HVW
'UDLQ VRXUFH EUHDNGRZQ YROWDJH	%9		9	9 , P$		
				9 , P$		
*DWH WKUHVKROG YROWDJH	9WK		9	9 ', P$		
'UDLQ VRXUFH RQ VWDWH UHVLVWDQFH	5 21			9 , $		
				9 ,' $		
*DWH VRXUFH OHDNDJH FXUUHQW	,66		Q$	9		
				9		
'UDLQ VRXUFH OHDNDJH FXUUHQW	,66			' 9 9		

'\QDPLF &KDUDFWHULVWLFV

3DUDPHWHU		6\PERO	0LQ	7\S	0D[	8QLW	7H
,QSXW FDSDFLWDQFH	LVV		&		S)	9*6 9	
2XWSXW FDSDFLWDQFH	RVV		&		S)	9'6 9	
5HYHUVH WUDQVIHU FDSDFLWDQFH	UVV			&	S)	¦ 0+]	
7XUQ RQ GHOD\ WLPH	G RQ		W		QV	9*6 9	
5LVH WLPH	U	W			QV	9'6 9	
7XUQ RII GHOD\ WLPH	G RII		W		QV	5* ; $	
)DOO WLPH	I	W			QV		

*DWH &KDUJH &KDUDFWHULVWLFV

3DUDPHWHU		6\PERO	0LQ	7\S	0D[	8QLW	7H
7RWDO JDWH FKDUJH	J		4		Q&		
*DWH VRXUFH FKDUJH	JV		4		Q&	9*6 9	
*DWH GUDLQ FKDUJH	JG		4		Q&	9'6 9 ; $	
*DWH SODWHDX YROWDJH	SODWHDX		9		9		

%RG\ 'LRGH &KDUDFWHULVWLFV

3DUDPHWHU		6\PERO	0LQ	7\S	0D[	8QLW	7H
'LRGH IRUZDUG YROWDJH	6		9		9	,6 $ 9*6 9	
5HYHUVH UHFRYHU\ WLPH	UU		W		QV	95 9	
5HYHUVH UHFRYHU\ FKDUJH	UU		4		&	,6 $	
3HDN UHYHUVH UHFRYHU\ FKDUJH	UUP	,			$	GL GW $ V	

1RWH

&DOFXODWHG FRQWELQXHG RQ FXUUHQX FWLRQ 7DHPSHUDXUH
5HSHWLWLYH UDWLQJ SXOVHG ZLGH UDWXUH WHPS
3G LV EDVHG RQ PD[MXQFWLRQ WHPSHUDWXUH XVLQJ MXQFWLR
7KH YDOXH RI 5 DVXUHG ZLWK WKH GHYLFH PRXQWHG RQ &RSHULQ)5
LQ D VWLOO DLU HQYLURQPHQW ZLWK 7
9 9 *8 9 / P+ VWDUW&QJ 7

(OHFWULFDO &KDUDFWHULVWLFV 'LDJUDPV

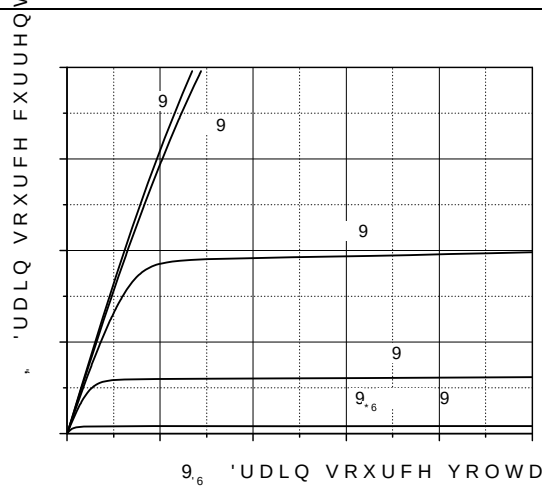

)LJXUH 7\S RXWSXW FKDUDFWHULVWLFV

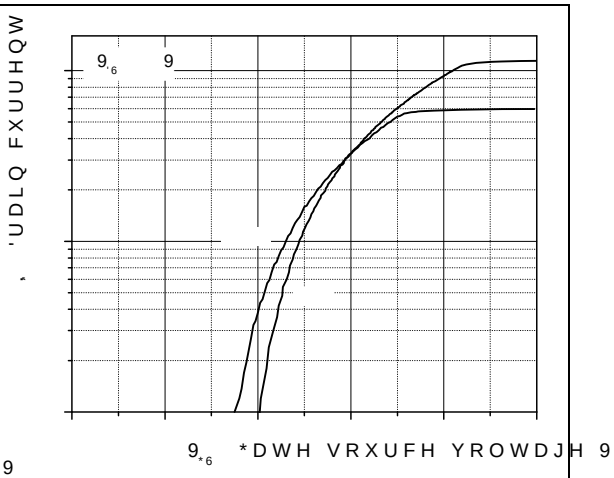

)LJXUH 7\S WUDQVIHU FKDUDFWHULVWLFV

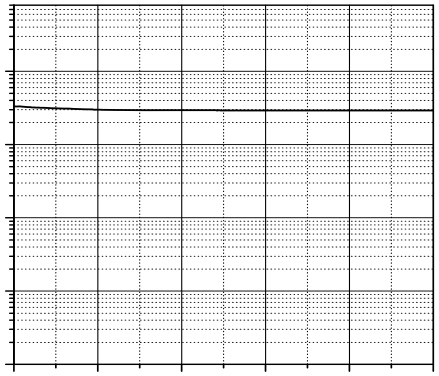

)LJXUH 7\S FDSDFLWDQFHV

)LJXUH 7\S JDWH FKDUJH

)LJXUH 'UDLQ VRXUFH EUHDNGRZQ YROWDJH YV MXQFWLRQ WHPSHUDWXUH

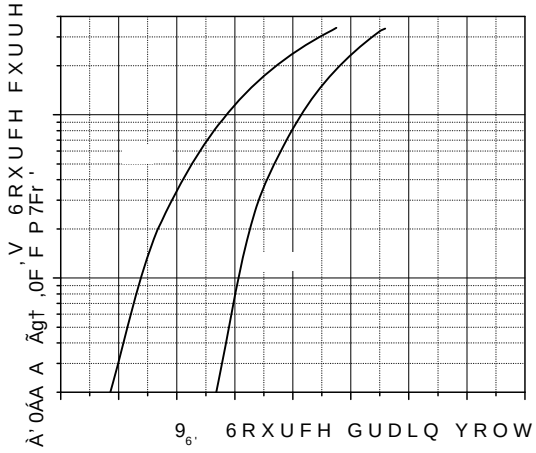

)LJXUH)RUZDUG FKDUDFWHULVWLFV RI (QKDQFHPHQW 0RGH 1 &KDQQHO 3RZHU

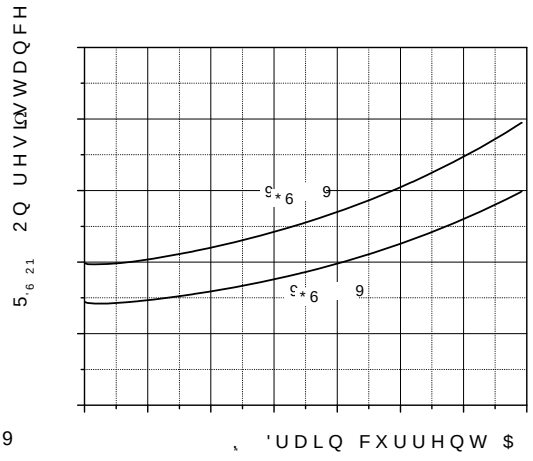

)LJXUH 2Q UHVLVWDQFH YV 'UDLQ &XUUHQW DQG *DWH 9ROWDJH

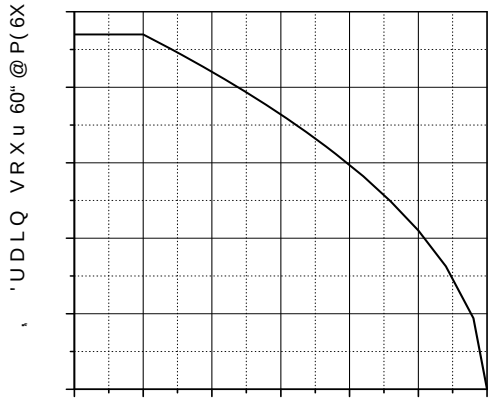

)LJXUH 'UDLQ FXUUHQW YV 'UDLQ 6RXUFH %UHDNGRZQ 9ROWDJH

)LJXUH 6DIH 2SHUDWLQJ $UHD

7HVW FLUFXLWV DQG ZDYHIRUPV

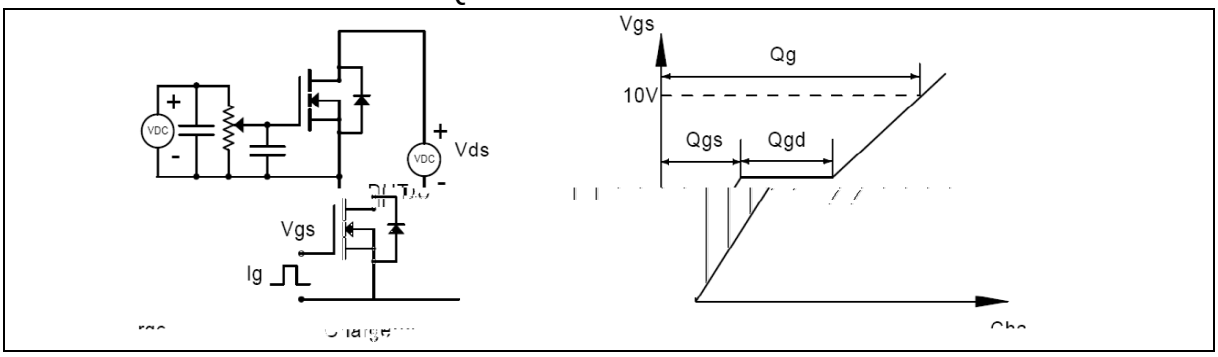

)LJXUH *DWH FKDUJH WHVW FLUFXLW ZDYHIRUP

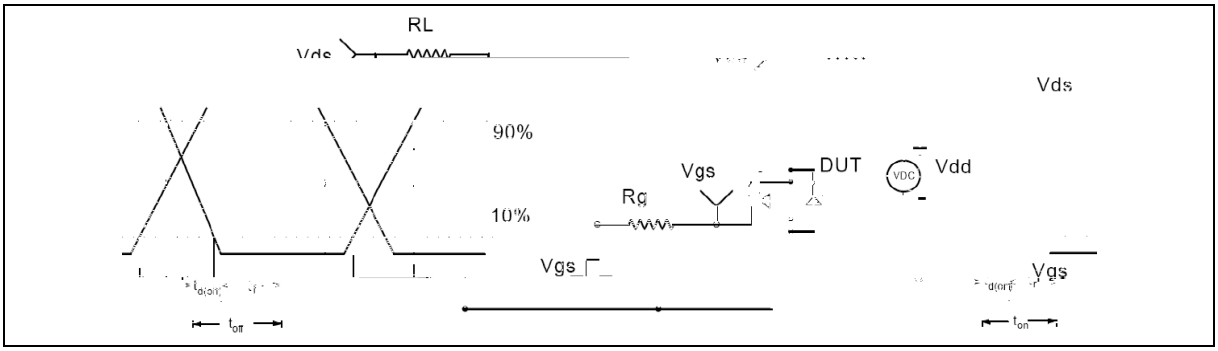

)LJXUH 6ZLWFKLQJ WLPH WHVW FLUFXLW ZDYHIRUP

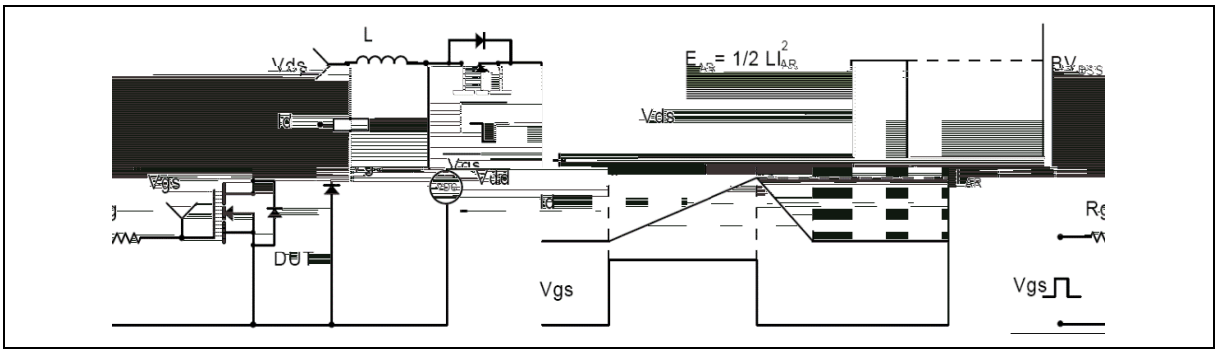

)LJXUH 8QFODPSHG LQGXFWLYH VZLWFKLQJ WHVW FLUFXLW ZD

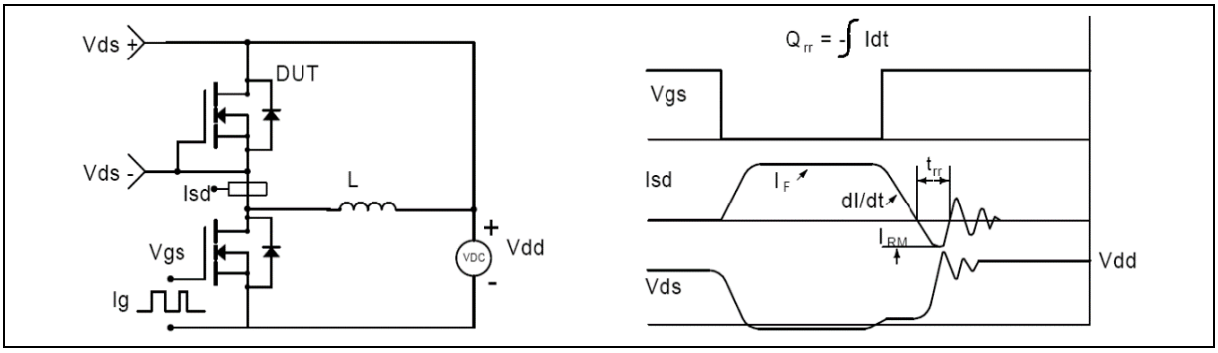

)LJXUH 'LRGH UHYHUVH UHFRYHU\ WHVW FLUFXLW ZDYHIRUPV

3DFNDJH ,QIRUPDWLRQ

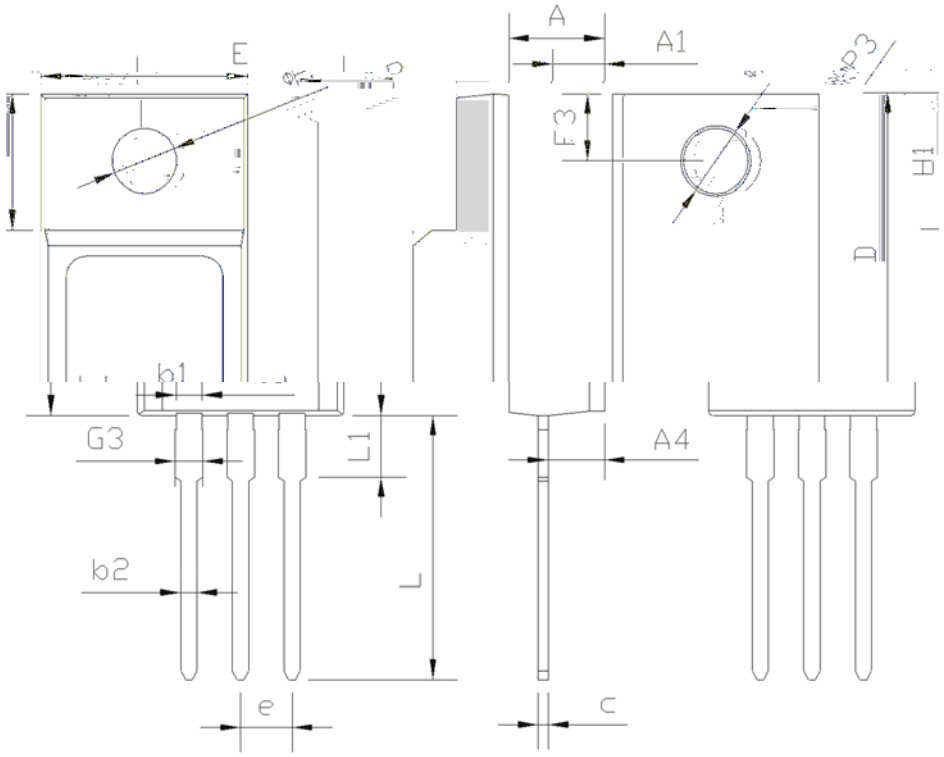

6\PERO	PP		
	0LQ	1RP	0D[
(			
$			
$			
$			
F			
'			
+	5()		
H	%6&		
/			
/			
-3			
-3			
)			
*			
E			
E			

9HUVLRQ 72) & RXWOLQH GLPHQVLRQ

o 3 o 3 26*o 5)) 3