Hunteck

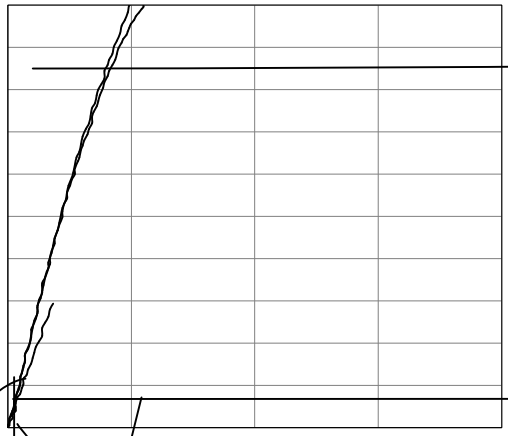

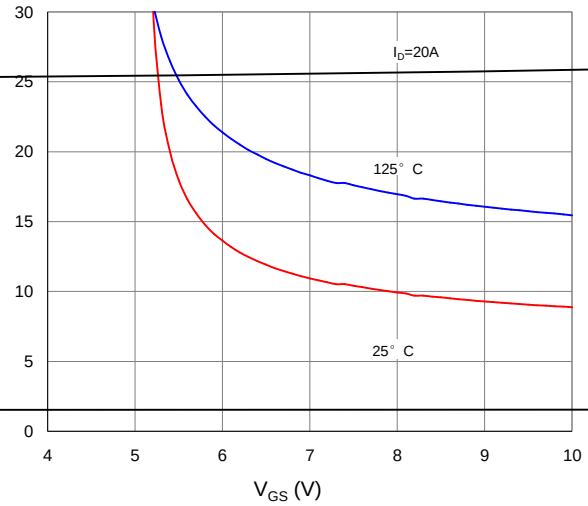
30
25
20
15
10
5
0
4
5
6
7
8
9
10
I_D=20A
125° C
25° C
V_{GS} (V)

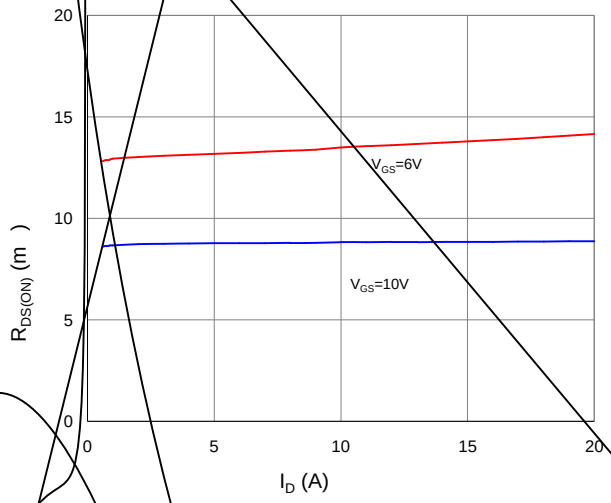
20
15
10
5
0
0
5
10
15
20
V_{GS}=6V
V_{GS}=10V
$R_{DS(ON)}$ (m)
I_D (A)

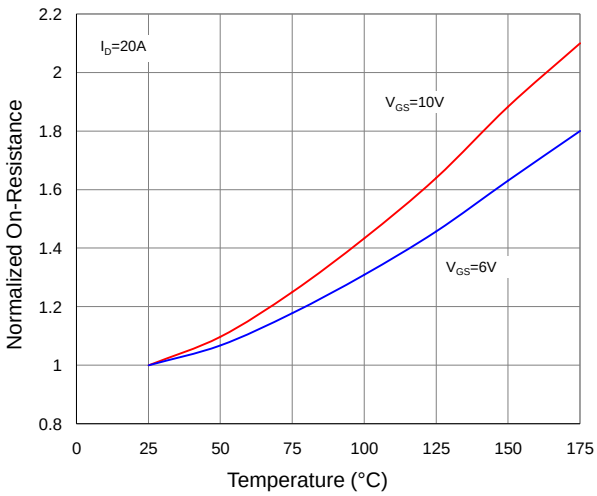
2.2
2
1.8
1.6
1.4
1.2
1
0.8
0
25
50
75
100
125
150
175
I_D=20A
V_{GS}=10V
V_{GS}=6V
Normalized On-Resistance
Temperature (°C)

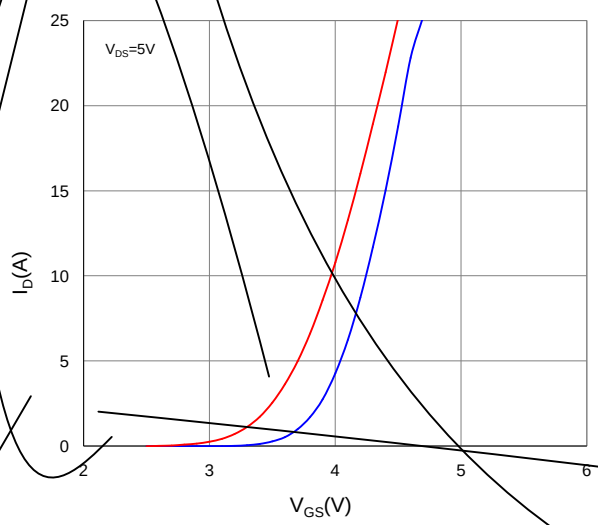
25
20
15
10
5
0
2
3
4
5
6
V_{DS}=5V
I_D(A)
V_{GS}(V)

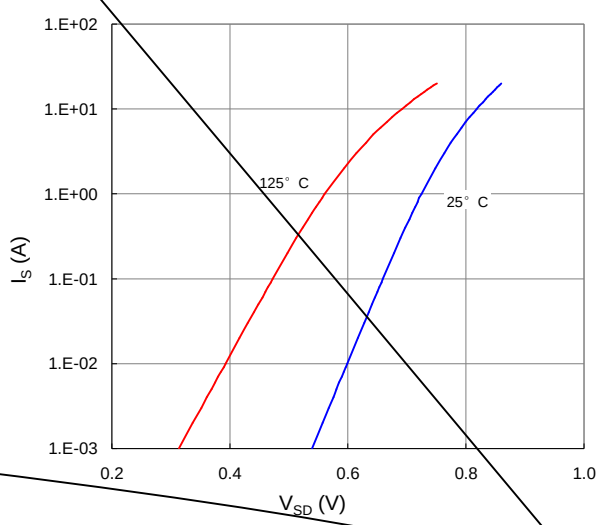
1.E+02
1.E+01
1.E+00
1.E-01
1.E-02
1.E-03
0.2
0.4
0.6
0.8
1.0
125° C
25° C
I_S (A)
V_{SD} (V)

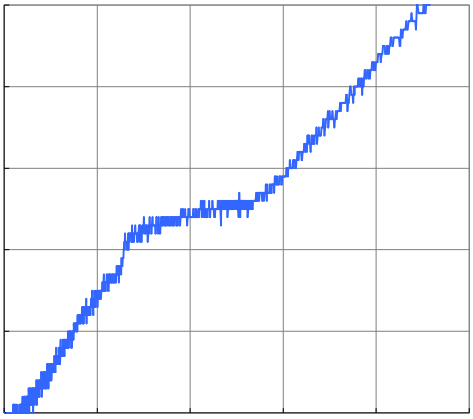

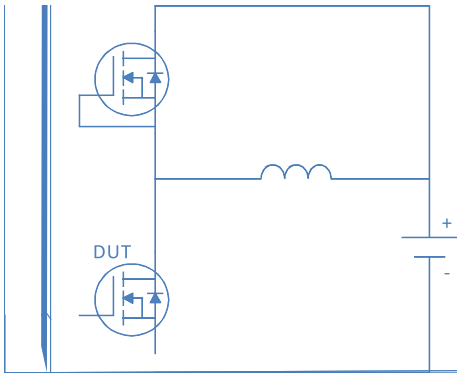
DUT
+
-

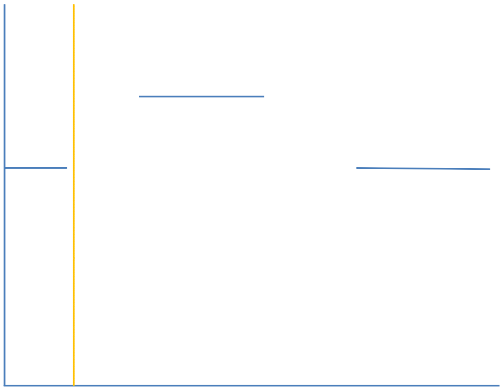

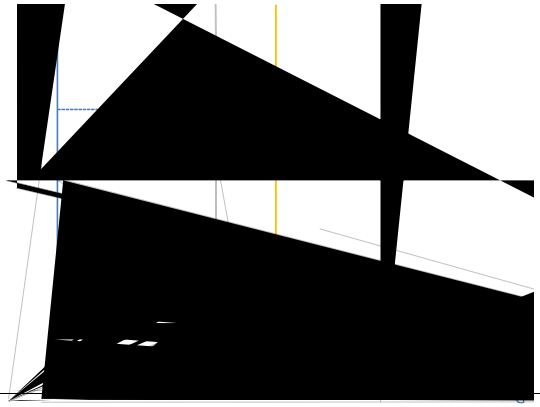

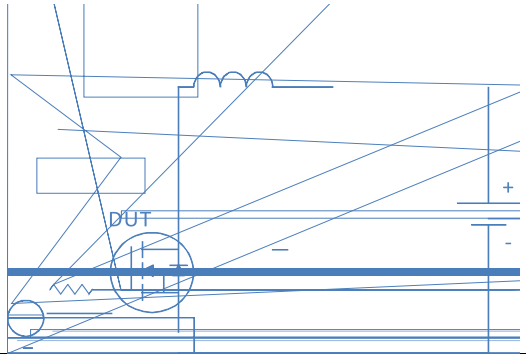
DUT
+
-

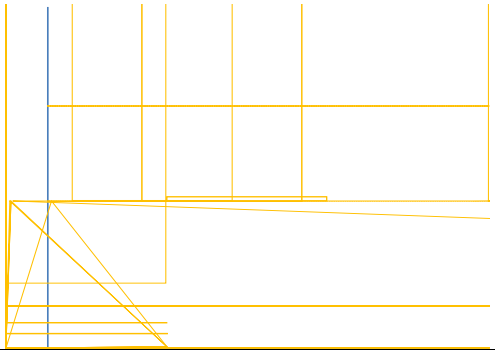

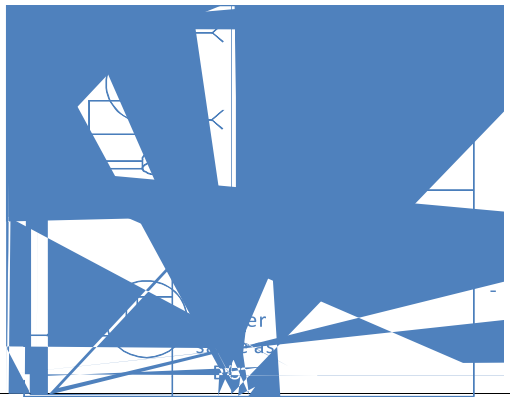

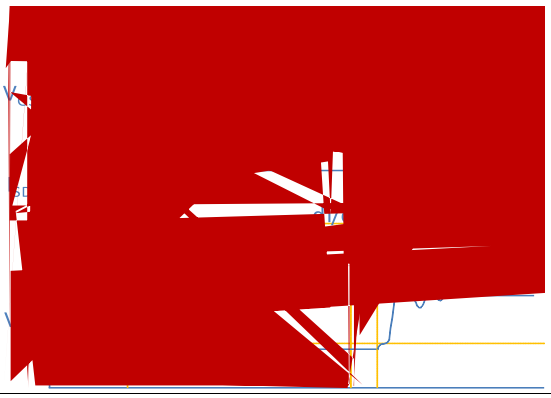

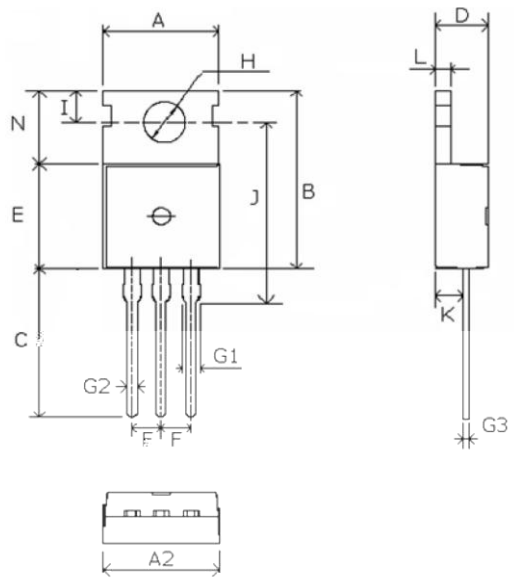
A
H
D
L
N
I
E
J
B
C
G1
G2
F
F
K
G3
A2

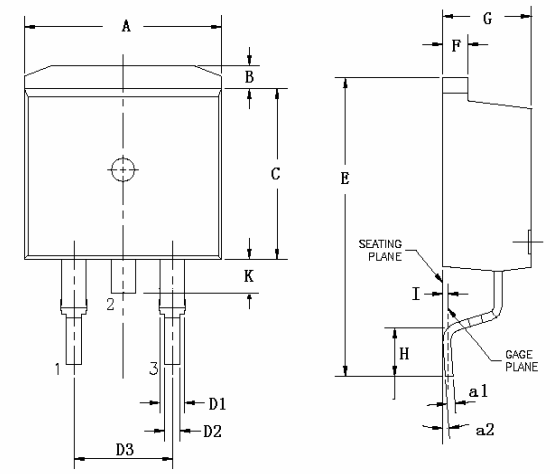
A
B
C
K
1
2
3
D1
D2
D3
G
F
E
SEATING PLANE
I
H
GAGE PLANE
a1
a2